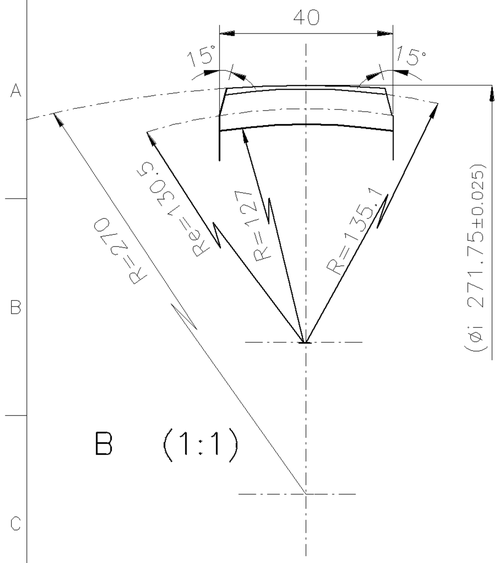

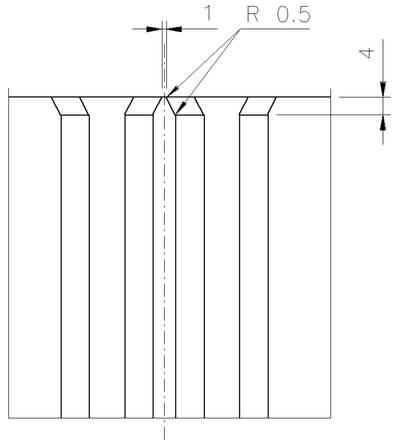

PART. SM. DENTATURA (1:1)
DETAIL CH. TEETH

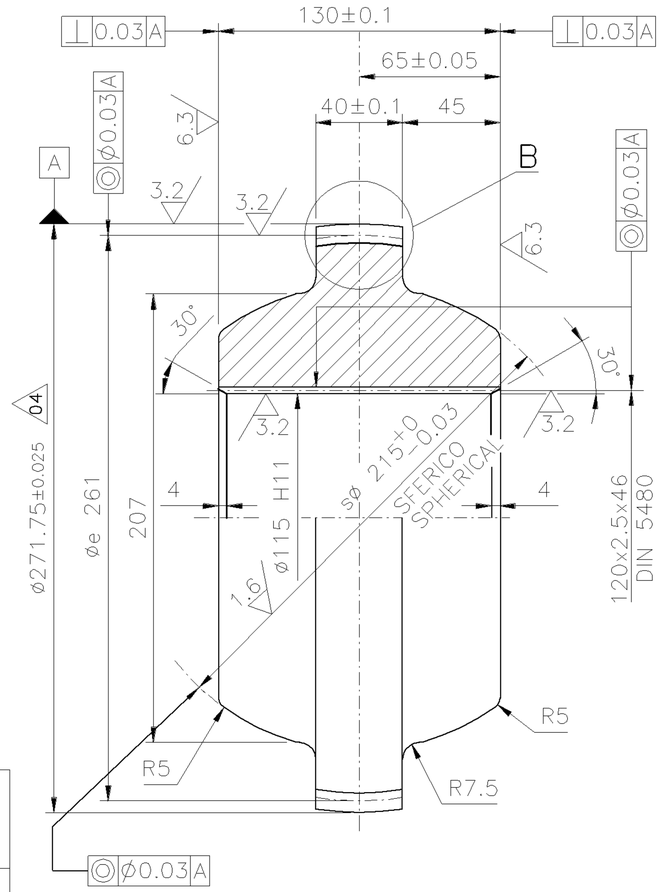

DENTATURA MOZZO	–	HUB TOOTHING
DIAMETRO RIFERIMENTO	D= 120 mm	REFERENCE DIAMETER
MODULO NORMALE	M= 2.5 mm	NORMAL MODULE
ANGOLO DI PRESSIONE	30° DEG	PRESSURE ANGLE
NUMERO DENTI	Z= 46	TEETH NUMBER
DIAMETRO DI TESTA	DA2= 115.0 mm	TIP DIAMETER
DIAMETRO DI FONDO	DF2= 120 mm	ROOT DIAMETER
SCOSTAMENTO PROFILO	X*M= −1.125 mm	PROFILE CORRECTION
ALTEZZA DEL DENTE	H= 2.250 mm	TOOTH DEPTH
GIOCO MINIMO/MASSIMO SUL FIANCO DEL DENTE	0.028 mm / 0.136 mm	MINIMUM AND MAXIMUM TOOTH SIDE CLEARANCE
UNIFICAZIONE CLASSIFICA "DIN" ALBERO	DIN 5480 – GD120 2.5 X 30 X 46 X 8H LQ3	HUB "DIN" UNIFICATION
DIAMETRO DEI RULLI	D = 4.5	BALL DIAMETER
DISTANZA TRA I RULLI – DISTANCE BETWEEN ROLLING		
DISTANA NOMINALE	MI= 110.552 MM	NOMINAL DISTANCE
DISTANA MINIMA	KMI= 110.592 MM	MINIMAL DISTANCE
DISTANZA MASSIMA	GMI= 110.661 MM	MAXIMAL DITANCE
INGRANA CON DIS.	4.428436.K	MESHES WITH DWG.

Rev.	Date	Revisions description	Drawn by	Checked by	Approved by
04B	10 Nov 2006	AGGIORNATO NORMA LAMINATI UPDATE ROLLED STANDARD	Dassi	Zampa	
04	13 Oct 2003	MODIFICATO DOVE INDICATO REVISED WHERE INDICATED	Chiappin	Miotti	
03	5 Jun 2003	AGG. TOLL. GEOM., AGGIORN. GRAF. ADD. TOLL. GEOM., UPD. GRAPHIC.	Fontanin	Miotti	
02	28 Apr 1997	AGGIORNATO SIGLA MATERIALE UPDATE MATERIAL CODE	Moratti	Mazzolo	
01	29 Apr 1996	MODIFICATO GRADO DI LAVORAZIONE 1.6 ERA 3 MOD. THE DEGREE OF SURFACE 1.6 WAS 3	Cancelli	Chiappin	
00	10 Apr 1995	EMISSIONE ISSUED	P.s.b.	Odorico	Canzutti

DENTATURA CILINDRICA ISO 7
STRAIGHT GEAR

mn	Modulo normale	– Normal module	Mn	= 4.5
z	Numero di denti	– Number of teeth	z	= 58
An	Angolo di pressione	– Pressure angle		= 20°
d'	Diametro primitivo fun.	– Pitch dia.	øp	= 265.5
d	Diametro primitivo rif.	– Reference pitch	øe	= 261
dt	Diametro di testa	– tip dia.	øi	= $271.75^{+0.025}_{-0.025}$
df	Diametro di piede	– Root dia.		= 254
db	Diametro di base	– base dia.		= 245.26
a	Addendum		a	= 3.125
d	Dedendum		b	= 5.75
h	Altezza del dente	– tooth depth		= 8.875
b	Larghezza del dente	–face width		= 40
x	coef. spostamento	– modification coefficent		= 0.5
k	coef. riavv. inter.	– c.d re – approach coeff.		= /
W1N	scartamento nom.	– nominal base tangent length		= 104.829
K1	n° denti misurati	– n° of teeth spanned		= 8
Jn	gioco normale	– normal backlash		= 0.23 ÷ 0.34 (04)
W1	scartamento reale	– red base tangent length		= 104.72 ÷ 104.67

ingrana con = 58 dis. 4.428430.Z meshes with = 58 dwg. 4.428430.Z

NOTE DI EQUILIBRATURA
BALANCING NOTES

1 – GRADO DI EQUILIBRATURA BALANCING DEGREE	Q =	2,5	mm/sec.
2 – ECCENTRICITA' RESIDUA TOLLERABILE RESIDUAL ECCENTRICITY	e =	0.021	mm.
3 – NUMERO DI GIRI MAX. MAX REVOLUTION NUMBER	R.p.m. =	1200	g/min.
4 – VELOCITA' PERIFERICA PERIPHERAL SPEED	=	29	m/sec.

1 –BONIFICA
HARDENING AND TEMPERING
2 –PROFONDITA' EFFICACE : mm 03-05
TREATMENT DEPTH
3 – – – :TRATTAMENTO NITREG HRC= 54-56
:HEAT TREATMENT NITREG
4 –DUREZZA : HB=280–310
HARDNESS

Material 1 (where not indicated on drawing) 36CrNiMo4+HH EN 10083-1	State of supply Mat.1	Danieli Supply Std. 2.8.032	Supply Class C	Pattern DB
Material 2	State of supply Mat.2	Danieli Supply Std.	Supply Class	Casting Code
Material 3	State of supply Mat.3	Danieli Supply Std.	Supply Class	

Heat Treatment: VEDI DISEGNO
On Drawing Symbol, if required, ---: SEE DRAWING
Coating
On Drawing Symbol, if required, ---

Unquoted radius (mm)	Unquoted bevels	Dimensions without tolerance as per	Machinings	Max. Welding Class
	1X45° (mm)	DANIELI STD 2.4.103	12.5 / 6.3 / 3.2 / 1.6 / 0 / 0 / 0 / 0	

Project Name

DANIELI MORGÅRDSHAMMAR

Job nr
Obtained from
Replaces
Family code/Machine code: 447301
Weight (Kg): 27
J (Kgm²)

Title: PIGNONE
PINION

Scale: 1:2
Format: A2
Nr. of sheets: 001
Sheet: 001 Follow

DANIELI Shop number: 4.428435.H
Revision: 04B
DANIELI dwg number
Revision

According to law DANIELI & C. SpA considers this document to be a company secret and therefore prohibits any person to reproduce or disclose it or make it known in whole or in part to other parties or to competitors without specific written authorization of DANIELI's Management

File nr 4428435H_001 D&C CD 10/08/2007 DP03G4012193

COMPUTER AIDED DESIGN –A

DP03G4012193 10/08/2007 CD D&C